MANAV RACHNA UNIVERSITY

DEPARTMENT OF MATHEMATICS

"T3 Examination, June-2022"

SEMESTER	II	DATE OF EXAM	23/06/2022
SUBJECT NAME	MATHEMATICS II	SUBJECT CODE	MAH105B-T
BRANCH	Mechanical	SESSION	I
TIME	3 hrs	MAX. MARKS	100
PROGRAM	B.Tech.(Mechanical)	CREDITS	4
NAME OF FACULTY	Ms. Seema Aggarwal	NAME OF COURSE COORDINATOR	Ms. Seema Aggarwal

Note: All questions are compulsory.

	Q.NO.	QUESTIONS	MARKS	CO ADDRESSED	BLOOM'S LEVEL	PI
PART-A	Q1(a)	Prove that $\int_1^2\int_3^4(xy+e^y)dy\,dx=\int_3^4\int_1^2(xy+e^y)dx\,dy.$	5	CO1	BT2	1.2
PART-A	Q1(b)	Prove that $\int_0^\infty x^{p-1}e^{-kx}dx=\frac{1}{k^p}\Gamma(p),\ (k>0),$	5	CO1	BT2	1.2
PART-B	Q2(a)	If the temperature of the air is $30°C$ and the substance cools from $100°C$ to $70°C$ in 15 minutes, find when the temperature will be $40°C$.	10	CO2	BT3	1.2
PART-C	Q3(a)	Find the values of A and B such that the function $f(z)=x^2+Ay^2-2xy+i(Bx^2-y^2+2xy)$ is analytic .Also find $f'(z)$.	5	CO3	BT3	1.2
PART-C	Q3(b)	Show that the function $u=e^{-2xy}\sin(x^2-y^2)$ is harmonic. Find the conjugate function v and express $u+iv$ as an analytic function of z.	15	CO3	BT3	1.2
PART-C	Q4(a)	Show that the transformation $w=\frac{2z+3}{z-4}$ maps the circle $x^2+y^2-4x=0$ onto the straight line $4u+3=0$	10	CO3	BT3	1.2
PART-C	Q4(b)	Find the bilinear transformation which maps the points $z=1,i,-1$ into the points $w=i,0,-i$. Hence ,find the image of $\lvert z\rvert<1$.	10	CO3	BT3	
PART-D	Q5(a)	Show that $\oint_C(z+1)dz=0$, where C is the boundary of the square whose vertices are at the points $z=0, z=1, z=1+i$ and $z=i$.	10	CO3	BT3	
PART-D	Q5(b)	Evaluate $\oint_C\frac{e^z}{(z-1)(z-2)^2}dz$,where C is the circle $\lvert z\rvert=3$ using Cauchy's Integral Theorem/Formula.	10	CO3	BT3	

****

Q6(a)	Find the series expansion of $f(z) = \frac{z^2-1}{z^2+5z+6}$ *about* $z = 0$ in the region (i) $\lvert z\rvert < 2$ (ii) $2 < \lvert z\rvert < 3$. Identify the series.	10	CO3	BT3	
Q6(b)	Evaluate $\oint_C \frac{z-3}{(z)^2+2z+5} dz$,where C is the circle given by (i) $\lvert z+1-i\rvert = 2$ (ii) $\lvert z+1+i\rvert = 2$ using Residue Theorem.	10	CO3	BT3	

********** **END** **********

MANAV RACHNA UNIVERSITY

Declared as State Private University vide Haryana Act 28 of 2014

DEPARTMENT OF MECHANICAL ENGINEERING

"T3 Examination, June-2022"

SEMESTER	II	DATE OF EXAM	24/06/2022
SUBJECT NAME	MANUFACTURING PROCESSES	SUBJECT CODE	MEH 103B-T
BRANCH	ME	SESSION	MORNING
TIME	8:30-11:30	MAX. MARKS	100
PROGRAM	B.TECH ME & SMA	CREDITS	4
NAME OF FACULTY	MNDEEP BHADANA	NAME OF COURSE COORDINATOR	MANDEEP BHADANA

Note: Part A&B: Questions will be of 10 Marks each.

Part C&D:. Each question will be of 20 marks. Attempt all questions.

Q.NO.		QUESTIONS	MARKS	CO ADDRESSED	BLOOM'S LEVEL	PI
PART-A&B	Q1	What is Sheet metal forming? Explain different operation of Sheet metal forming with diagram.	10	CO1	L1	1.1
	Q2	Define tool wear. Explain different types of tool wear with diagram. In a cutting test with 0.3 mm flank wear as tool failure criterion, a tool life of 10 minutes was obtained at a cutting velocity of 20m/min. Taking tool life exponent as 0.25, Calculate tool life in minutes at 40m/min of cutting velocity.	10	CO2	L2	1.2
	Q3	Define welding and write their classification also differentiate between Friction welding and Resistance welding process with diagram.	20	CO3	L3	2.1
PART-C	Q4	What is the function of an electrode in a welding process? Differentiate between consumable and non consumable electrode. Explain the working principle of TIG and MIG welding with diagram.	20	CO3	L3	3.1
PART-D	Q5	Explain Electrochemical machining with diagram.While removing material from iron (atomic weight=56, valancy=2, density=7.8g/cc) by electrochemical	20	CO4	L4	4.1

****

		machining, a metal removal rate of 2 cc/min is desired. What is the current required for achieving this.				
	Q6	Explain the Electric Discharge Machining and Laser Beam Machining in detail. Discuss its advantages, disadvantages and applications in industry. Also present an insight on the factors affecting EDM process.	20	CO2	L5	4.2

********** **END** **********

MANAV RACHNA
Vidyajyoti Vivekshil

MANAV RACHNA UNIVERSITY

(FORMERLY MANAV RACHNA COLLEGE OF ENGINEERING
NAAC ACCREDITED 'A' GRADE INSTITUTION)
Declared as State Private University under section 2f of the UGC act 1956

DEPARTMENT OF PHYSICS

"T3 Examination, June-2022" *Set- 1*

Semester: II
Subject: Optics and Wave Oscillations
Branch: ME/SMA
Course Type: Core
Time: 3 hrs.
Max.Marks: 100

Date of Exam: 27/06/2022
Subject Code: PHH110B - T
Session: Morning
Course Nature: Hard
Program: B.Tech
Signature: HOD/Associate HOD

PART -A

S. No	Questions	Marks	Course Outcomes	Blooms Taxonomy Level	Performance Indicator
Q.1	Explain the construction and working of Michelson interferometer	10	CO1	BT2	1.3.1, 2.1.2.2.2.4

PART – B

S. No	Questions	Marks	Course Outcomes	Blooms Taxonomy Level	Performance Indicator
Q2.	Explain the construction and working of Nicol prism.	10	CO2	BT2	1.3.1, 2.1.2.2.2.4

PART -C

S. No	Questions	Marks	Course Outcomes	Blooms Taxonomy Level	Performance Indicator
Q3.(a)	How does a semiconductor laser differ from other lasers? Why do we need heavily doped p- n junction diode? Explain its working with suitable energy band diagrams.	14	CO3	BT2	1.3.1, 2.1.2.2.2.4
(b)	Explain single mode step index, multimode step index and multimode graded index fibers	6	CO3	BT2	1.3.1, 2.1.2.2.2.4
Q4(a)	Discuss the construction and working of He-Ne Laser.	15	CO3	BT2	1.3.1, 2.1.2.2.2.4
(b)	Determine the numerical aperture and acceptance angle of a fiber if the refractive index of core and cladding are 1.49 and 1.48 respectively	5	CO3	BT3	1.3.1, 2.1.2.2.2.4

PART -D

****

S. No.	Questions	Marks	Course Outcomes	Blooms Taxonomy Level	Performance Indicator
Q5. (a)	What do you mean by free vibrations? Derive an expression for average energy for the free oscillator	16	CO4	BT2	1.3.1, 2.1.2,2.2.4
(b)	Show that if the displacement of a moving point at any time is given by equation of the form $x = a\cos\omega t + b\sin\omega t$, the motion is simple harmonic. If $a = 3$, $b = 4$ and $\omega = 2$, determine its period, amplitude, maximum velocity and maximum acceleration of the motion.	4	CO4	BT3	1.3.1, 2.1.2,2.2.4
Q.6 (a)	What are forced vibrations? Write down the equation of motion for a forced oscillator on which a periodic force of frequency **p** is applied. Derive an expression for the average power supplied to the oscillator.	16	CO4	BT2	1.3.1, 2.1.2,2.2.4
(b)	The potential energy of a harmonic oscillator of mass 2 g in its rest position is 5 ergs and its amplitude is 1 cm. Calculate its time period.	4	CO4	BT3	1.3.1, 2.1.2,2.2.4

****

MANAV RACHNA
vidyanotarlishe

MANAV RACHNA UNIVERSITY

(FORMERLY MANAV RACHNA COLLEGE OF ENGINEERING)
NAAC ACCREDITED 'A' GRADE INSTITUTION)
Declared as State Private University under section 2f of the UGC act 1956

DEPARTMENT OF COMPUTER SCIENCE & TECHNOLOGY

"T3 Examination, May 2022"

SEMESTER	**II**	**DATE OF EXAM**	**01.07.2022**
SUBJECT NAME	Programming for Problem Solving using C	**SUBJECT CODE**	**CSH101B-T**
BRANCH	ME/SMA	**SESSION**	**I**
TIME	**3 hrs**	**MAX. MARKS**	**100**
PROGRAM	**B.Tech**	**CREDITS**	**5**
NAME OF FACULTY	**Dr. Shalu**	**NAME OF COURSE COORDINATOR**	**Dr. Shalu**

Note: All questions are compulsory.

S. No.	QUESTIONS	MARKS	CO ADDRESSED	BLOOM'S LEVEL	PI
Q1(a)	Write the structure definition for creating a structure for student with structure elements student_course, student_name, student_phoneno and address.	2	CO4	BT3	2.2.4
Q1(b)	Write the statement to declare a 2-D array named class1 of type float with 10 rows and 20 columns.	2	CO2	BT2	2.1.2

Q1(c)	char abc = '3';
	switch (abc)
	{
	case '1': printf ("option A.");
	case '2' : printf ("option B") ;
	break;
	case '3' :
	case '4' :
	case '5' :
	default: printf ("No option");
	}
		2	CO1	BT3	3.1.2

Q1(d)	for (i=0;i<5;i++)	2	CO2	BT3	3.1.2

	{
	for (j=0; j<3;j++)
	{
	printf ("%d\t", j);
	}
	printf("\n");
	}				

Q1(e)	main()
	{
	int x, y;
	x = 5;
	y = x++ / 2;
	printf("%d", y);
	return 0;
	}
		2	CO2	BT3	3.1.2

Q1(f)	What will be the size in memory of a single structure variable of the following C structure?
	struct employee
	{
	int phoneno;
	char employee_name[20];
	float salary;
	};
		2	CO4	BT3	2.2.4

Q1(g)	Differentiate between a function signature and a function definition with examples.	2	CO3	BT2	2.1.2
Q1(h)	Give two differences between linear search and binary search.	2	CO4	BT2	3.1.2

Q1(i)	Give the output of the following C code:
	void main ()
	{
	int a=10, b=25;
	void swap (int, int);
	swap(a,b);
	}
	void swap (int p, int q)
	{
	int t;
	t=p;
	p=q;
	q=t;
	printf ("%d %d %d", p, q, t);
		2	CO3	BT3	2.1.2

Q1(j)	Give the output of the following C code: char str1[10] =" MANAV"; char *str2=" RACHNA"; strcat(str1, str2);	2	CO3	BT3	4.1.2

Q2	a) Create a script for the following scenario: Create a variable known as Counter. Create a new block named pentagon for drawing a pentagon whose side lengths are all specified by parameters. Write a script that draws a pentagon of side 100 and every time when the value of variable counter changes the pen color will also change. The sprite should move indefinitely within the block and stop when the space bar key is pressed.	(5+5)	C01	BT3	3.1.2
	b) Distinguish Scratch's Repeat, Repeat until, and forever control statements.		CO1	BT1	1.1.2
Q3	a) Write a Program to count the number of digits in a given integer using a loop. **input: 4056 Output: 4** b) Write a program to find the sum of even numbers in an array.	(5+5)	C02	BT3	3.1.2
Q4	a) Write a program to calculate power(a,n) by taking the number a and its exponent b from the user, and use recursion to solve the given problem. Does any program run without function argument and its return type. Justify your answer with suitable example.	(10+10)	C03	BT3	2.1.2
	b) Consider the football match score [6] = {90, 80, 70, 75, 85, 78} of 6 teams. Find the average score of the match using functions in C.		C04	BT2	1.1.2
Q5	a) Describe the concept of dynamic memory allocation malloc (), calloc(), free() and realloc()?	(10+10)	C03	BT2	2.1.2
	b) Why is call by reference method preferred over call by value method in functions when swapping two variables?		CO2	BT2	1.4.2
Q6	a) Consider a scenario of a university structure with data members Hotel_name, Hotel_id, Location, Price_of_accomodation,Date_of_development(year,month,date). Read and display this information of 3 such hotels.	(10+10)	C04	BT3	2.1.2
	b) Write a program in C to multiply two matrices.				

MANAV RACHNA UNIVERSITY

DEPARTMENT OF CHEMISTRY

"T3 Examination, JUNE-2022"

SEMESTER	**IInd**	**DATE OF EXAM**	**29-06-2022**
SUBJECT NAME	**ENVIRONMENTAL SCIENCES**	**SUBJECT CODE**	**CHH137**
BRANCH	**B.Scs. (Physics, Chem, Math.), B. Tech (CSTI, AIML, CDA)**	**SESSION**	**I**
TIME	**08:30 AM to 10:30 AM**	**MAX. MARKS**	**60**
PROGRAM	**B.Scs. (Physics, Chem, Math.), B. Tech (CSTI, AIML, CDA)**	**CREDITS**	**4**
NAME OF FACULTY	**Dr. V. V. Pathak**	**NAME OF COURSE COORDINATOR**	**Dr. V.V. Pathak**

***Note: Part A& B:** All questions are compulsory. Questions will be of MCQ/short answer type, marks are indicated against the question.*

***Part C:** Attempt any two question. Questions will be of long answer type, each question carries 10 marks.*

***Part D:** Attempt any two question. Questions will be of long answer type, each question carries 10 marks.*

Q.NO.		QUESTIONS	MARKS	CO ADDRESSED	BLOOM'S LEVEL	PI
PART-A	Q1(A)	Zone containing air, water and soil is known as: (i) Atmosphere (ii) Lithosphere (iii) Biosphere (iv) Hydrosphere	1	CO1	L2	
	Q1(B)	5th June is observed as: (i) World forest day (ii) World Environment day (iii) World wildlife day (iv) World population day	1	CO1	L2	
	Q1(C)	The life supporting zone of the earth is: (i) Biosphere (ii) Atmosphere (iii) Thermosphere (iv) Mesosphere	1	CO1	L1	
	Q1(D)	Which of the following is an example of clean energy resources?	1	CO1	L2	

****

		(i) Solar Energy (ii) Wind Energy (iii) Tidal Energy (iv) All of the above			
	Q1(E)	Why environmental science is multidisciplinary in nature.	2	CO1	L2
	Q1(F)	Explain the term sustainable agriculture.	2	CO1	L2
	Q1(G)	Explain the term 'overgrazing' with example.	2	CO1	L2
PART-B	Q2(A)	How many bio geographical zones in India? (i) 5 (ii) 10 (iii) 4 (iv) 8	1	CO2	L1
	Q2(B)	Which of the following species is categorized under endangered species? (i) Bengal Tiger (ii) Asiatic Lion (iii) Snow leopard (iv) All of the above	1	CO2	L2
	Q2(C)	Food chain always starts with: (i) Respiration (ii) Photosynthesis (iii) Transpiration (iv) Nitrogen fixation	1	CO2	L2
	Q2(D)	Detritus food chain starts from: (i) Green plants (ii) Grass (iii) Dead organic matter (iv) Phytoplankton	1	CO2	L1
	2(E)	Give an account of energy flow in ecosystem.	2	CO2	L2
	2(F)	Describe Nitrogen cycle.	2		
	2(G)	What is Allogenic succession?	2		
PART-C	Q3	What do you understand by solid waste? Explain .different methods for solid waste management.	10	CO3	L2, L3
	Q4	Write short notes on followings: (i) Disaster Management (ii) Global Warming (iii) Ozone layer depletion (iv) Acid rain	2.5×4 =10	CO3	L3, L4
	Q5	Define the term water pollution. What are the sources, impacts and control measures of water pollution?	10	CO3	L3

•••••••

PART-D	Q6	Differentiate between population explosion and population growth. Explain the different methods for population control.	10	CO4	L3	
	Q7	Write short notes on following: (1) Wasteland reclamation (ii) Infectious disease (iii) Environmental Laws (iv) Population pyramid	2.5×4 =10	CO4	L3	
	Q8	Define the term 'remote sensing'. Explain the applications of remote sensing in environmental management.	10	CO4	L4	

********** END **********

****

MANAV RACHNA UNIVERSITY

Declared as State Private University vide Haryana Act 28 of 2014

SCHOOL OF EDUCATION AND HUMANITIES

T3 EXAMINATION JUNE-JULY 2022

SEMESTER	02	DATE OF EXAM	02/07/2022
SUBJECT NAME	Professional English-Advance	SUBJECT CODE	HLS103B
BRANCH	Education	SESSION	I
TIME	8.30-10.30 AM	MAX. MARKS	50
PROGRAM	B Tech (AIML-2A, 2B, CSTI, CDA, ME, ECE)	CREDITS	03
NAME OF FACULTY	Dr Akhilesh/DrChhavi	NAME OF COURSE COORDINATOR	Dr Akhilesh Kumar Dwivedi

Note: Attempt all the questions from Part A & B and any three questions from Part C. Write answers into your own words.

Q.NO.		QUESTIONS	MARKS	CO ADDRESSED	BLOOM'S LEVEL	PI
PART-A	1	Define coherence with its principles.	2	CO1 & CO3	BT-2	
	2	Explain linguistic barriers and remedies to remove them in communication.	2	CO1 & CO3	BT-4	
	3	Discuss the basic telephonic etiquettes.	2	CO1 & CO3	BT-2	
	4	Differentiate between hearing and listening with a suitable example.	2	CO1 & CO3	BT-4	
	5	What is a persuasive writing style? Give examples.	2	CO1 & CO3	BT-2	
PART-B	6	Write a detailed note on types of word-formation.	5	CO1 & CO3	BT-2	
	7	"Good pronunciation is more than just mastering individual sounds." Justify the statement with suitable example.	5	CO1 & CO3	BT-4	

****

PART-C	8	Explain the points need to keep in mind before a formal presentation.	10	CO1 & CO3	BT-2	
	9	Explain the barriers to communication in detail. State which barrier you have faced in a professional setting.	10	CO1 & CO3	BT-2	
	10	"Brevity is a great charm of eloquence." Justify the statement.	10	CO1 & CO3	BT-4	
	11	Explain the tips for effective introduction and conclusion in writing with an example.	10	CO1 & CO3	BT-2	

********** END **********

MANAV RACHNA UNIVERSITY

Declared as State Private University vide Haryana Act 26 of 2014

DEPARTMENT OF MECHANICAL ENGINEERING

"T3 Examination, June-2022"

SEMESTER	2nd	DATE OF EXAM	23/06/2022
SUBJECT NAME	PRODUCTION ERGONOMICS AND WORK PLACE DESIGN	SUBJECT CODE	MEH 507B-T
BRANCH	Mechanical Engineering	SESSION	8:30-11:30 AM (I)
TIME	3hr	MAX. MARKS	100
PROGRAM	M.Tech	CREDITS	4
NAME OF FACULTY	Ajit	Signature Of HOD	

Note: All questions are compulsory.

Q.NO.		QUESTIONS	MARKS	CO ADDRESSED	BLOOM'S LEVEL
PART-A	1(A)	Was ergonomics invented or discovered, or is it just a buzzword for what happens anyway? Discuss.	5	CO1	BT3
	1(B)	Define the effect of environmental conditions and work design on energy expenditure.	5	CO1	BT1
	1(C)	Discuss the steps for a ergonomically correct designed steering wheel.	5	CO1	BT3
	1(D)	Briefly outline the role of a manager with regards to industrial ergonomics.	5	CO2	BT2
PART-B	Q2(A)	What is manual material handling and discuss the issues involved in a workplace design?	10	CO2	BT2
	Q2(B)	Outline the ergonomics standards in details.	10	CO3	BT2
	Q3	Write a report that explains to a design engineer why anthropometric data should be used in the design of human-machine systems. Give examples from everyday life to support your arguments	20	CO3	BT3

****

PART-C	Q2(A)	Discuss the role of human factors data for interface design and general location of controls and display.	20	CO4	BT5
	Q2(A)	From the following case study investigate the ergonomic standards and human factors - The Punjab National bank which opens on 10 am every day (except Sunday) and closes at sharp 6 pm. There are total 25 employees working in this bank. Out of these, 15 (class B) are only for registering customer's data (both exchange) in a computer which is connected online through CBS technology. 5 (class B2) employees are receiving calls from customers and providing them updates, bank plans and also redressing the customer's grievances. Rests three are helpers (class C) and one is AGM while other is General Manager (class A).Initially when all have to do their duty/work assigned for 8 hours with lunch break from 1:30 to 2 pm for 30 minutes. What type of problems will be suffered by all employees?	20	CO4	BT6

MANAV RACHNA UNIVERSITY

Declared as State Private University under Haryana Act 26 of 2014

DEPARTMENT OF MECHANICAL ENGINEERING

"T3 Examination, June-2022"

SEMESTER	2nd	DATE OF EXAM	24.06.2022
SUBJECT NAME	Advanced Welding Techniques	SUBJECT CODE	MEH508B-T
BRANCH	Mechanical Engineering	SESSION	2021-22 (II)
TIME	08.30 AM to 11.30 AM	MAX. MARKS	100
PROGRAM	M.Tech	CREDITS	04
NAME OF FACULTY	GIANENDER KAJAL	NAME OF COURSE COORDINATOR	GIANENDER KAJAL

Note: All questions are compulsory. Questions will be of descriptive type or numerical.

Q.NO.		QUESTIONS	MARKS	CO	BLOOM'S LEVEL	PI
PART (A)	1.	Explain factors affecting changes in microstructure and mechanical properties of HAZ of steel in welding process.	10	CO1	BT2	10.2.1
PART (B)	2.	Describe, with a neat sketch, the salient features and basic principles of resistance spot welding.	10	CO2	BT2,3	12.2.1
PART(C)	3(A)	Define Weld Cracking. Write its types and explain Hot Cracking & Cold Cracking in details.	10	CO3	BT3	3.2.4
	3(B)	Discuss with neat sketch gas submerged arc welding (SAW) process, state the advantages, limitations and applications.	10	CO3	BT3	10.3.1
	3(C)	Explain working principle of resistance spot welding process, state the advantages, limitations and applications.	10	CO3	BT3	1.2.2

3(D)	Compare laser beam welding and electron beam welding process with context of working principle, special characteristics, constructional features, and applications	10	CO3	BT3	12.1.1
4(A)	Discuss following points related to friction/inertia welds, (i) Welding Variable (ii) Welding Geometry (iii) List of materials to be welded (iv) Joint preparation	20	CO4	BT2,3	10.2.1
4(B)	(a) Explain the difference between tungsten inert gas welding & metal inert gas welding with diagram. (b) Explain the effect of welding parameters on weld bead geometry.	20	CO4	BT2	12.2.1 12.2.5

********** END **********

MANAV RACHNA UNIVERSITY

Declared as State Private University vide Haryana Act 24 of 2014

DEPARTMENT OF MECHANICAL ENGINEERING

"T3 Examination, June-2022"

SEMESTER	2nd	DATE OF EXAM	27-06-2022
SUBJECT NAME	COMPUTER INTEGRATED MANUFACTURING	SUBJECT CODE	MEH509B-T
BRANCH	ME-M.TECH	SESSION	MORNING
TIME	08.30 AM to 11.30 AM	MAX. MARKS	100
PROGRAM	M.Tech	CREDITS	04
NAME OF FACULTY	Nazish Ahmad Shamsi	Signature of HoD	

Note: All questions are compulsory.

Q.NO.		QUESTIONS	MARKS	CO	BLOOM'S LEVEL	PI
PART (A & B)	1(A)	Discuss the concept of CIM and its scope.	05	CO1	BT1	12.2.1
	1(B)	Differentiate between the concept of Open and closed loop system in NC programming.	05	CO1	BT2	12.3.1
	2(A)	Discuss the advantages of Automation in manufacturing?	05	CO2	BT2	10.3.1
	2(B)	Classify the components of CIM and their role in manufacturing system.	05	CO2	BT2	12.3.1
PART-C	3(A)	Discuss the following along with its application: 1.Industrial Robots. 2. End Effectors. 3. Robot sensors. 4. Trajectory Planning in Robot Design.	20	CO3	BT3	12.3.1
	3(B)	Illustrate the considerations in Gripper design and selection by taking an example.	20	CO3	BT4	1.3.1
PART (D)	4(A)	Discuss the concept of expert system and its application in computer integrated manufacturing.	20	CO4	BT4	2.1.4
	4(B)	Discuss the following terms: 1. Fuzzy Logic. 2. Artificial Intelligence System. 3. Artificial Neural Networks 4. Process Planning and Scheduling	20	CO4	BT3	2.1.4

********** END **********

MANAV RACHNA UNIVERSITY

Declared as State Private University vide Haryana Act 26 of 2014

DEPARTMENT OF MECHANICAL ENGINEERING

"T3 Examination, JUNE-2022"

SEMESTER	II	DATE OF EXAM	29/06/2022
SUBJECT NAME	RAPID PROTOTYPING	SUBJECT CODE	MEH 511B-T
BRANCH	ME	SESSION	MORNING
TIME	8:30-11:30	MAX. MARKS	100
PROGRAM	M.TECH ME	CREDITS	4
NAME OF FACULTY	J P SHARMA	NAME OF COURSE COORDINATOR	J P SHARMA

***Note:** Attempt all questions.*

Q.NO.		QUESTIONS	MARKS	CO ADDRESSED	BLOOM'S LEVEL	PI
PART-A&B	Q1	Discuss the evolution of RP systems indicating the history and their growth rate in the industrial sector	10	CO1	L1	1.1
	Q2	What is rapid prototyping? Give its advantages and limitations. What are the materials used in rapid prototyping?	10	CO2	L2	1.2
PART-C	Q3 A	List the various rapid prototype concept modelers. Explain how SLS process can be used to produce direct and in-direct prototypes.	10	CO3	L3	3.1
	Q3 B	Explain about the Sander's model maker and Object Quadra system. Also explain the working principle of three dimensional printing along with its advantages	10	CO3	L3	3.3
	Q4 A	Enumerate the features of the software's for RP. With a neat sketch explain the copper polymide methods of tooling	10	CO3	L3	3.2
	Q4 B	Discuss in detail about the direct rapid tooling and indirect rapid tooling. Also differentiate between soft and hard tooling.	10	CO3	L3	3.2
PART-D	Q5 A	Explain the effect of part building, part finishing and part deposition orientation on accuracy of rapid prototyping model.	10	CO4	L4	4.1

•••••••

	Q5 B	Write short notes on: (i) Surface digitizing (ii) (ii) Surface modification – data transfer to solid models.	10	CO4	L4	4.2
	Q6 A	What is the collaboration tools used in RP software? Also explain laser generation process with neat sketch & also its applications	10	CO4	L4	4.2
	Q6 B	Explain in detail the LENS process with a neat diagram. Also write the advantages and disadvantages.	10	CO4	L4	4.2

********** **END** **********

****

MANAV RACHNA UNIVERSITY

Declared as State Private University vide Haryana Act 26 of 2014

DEPARTMENT OF MECHANICAL ENGINEERING

"T3 Examination, June-2022"

SEMESTER	**2nd**	**DATE OF EXAM**	**1st July 2022**
SUBJECT NAME	**Technical Research Paper Writing**	**SUBJECT CODE**	**MES513B-T**
BRANCH	**MECHANICAL**	**SESSION**	**1st**
TIME	**1.5hrs**	**MAX. MARKS**	**40**
PROGRAM	**M.TECH.**	**CREDITS**	**1**
NAME OF FACULTY	**Prashant Bhardwaj**	**HOD Signature**	

Note: All questions are compulsory.

Q.NO.		QUESTIONS	MARKS	CO ADDRESSED	BLOOM'S LEVEL
PART-A	Q1	How research paper is different from the review paper? Write down the steps for developing and organize a research paper in the Engineering Sciences?	10	CO1	BT2
PART-B	Q2	Explain the purpose of Literature review of your research? What steps are involved once you decide the Journal before submitting the paper?	10	CO2	BT3
PART-C	Q3	Define different forms of plagiarism. Write a short note on common ethical issue in research.	10	CO3	BT2
PART-D	Q4	What is the need of effective communication and its significance and importance?	10	CO4	BT2

****

DEPARTMENT OF Mechanical Engineering

"T3 Examination, MAY-2022"

SEMESTER	4th	DATE OF EXAM	27/05/2022
SUBJECT NAME	Lean Manufacturing	SUBJECT CODE	MEH609-B-T
BRANCH	Mechanical Engineering	SESSION	Morning
TIME	180 Minutes	MAX. MARKS	100
PROGRAM	M.TECH	CREDITS	04
NAME OF FACULTY	SUNNY BHATIA	NAME OF COURSE COORDINATOR	SANJAYTANEJA

***Note:** SECTION A & B - All questions are compulsory. (10x2=20 marks)*
Attempt two questions each from *SECTION-C & SECTION-D.* (4x20=80 marks)

	Q.NO.	QUESTIONS	MARKS	CO ADDRESSED	BLOOM'S LEVEL	PI
SECTION-A	Q1(A)	Mass production is not considered lean, why?	2	CO1	BT1	1.4.1
	1(B)	List out different types of waste.	2	CO1	BT1	1.3.1
	1(C)	Define the purpose of 5 S.	2	CO1	BT1	1.3.1, 12.1.1
	1(D)	List out different organizations in which 6 sigma is implemented.	2	CO2	BT1	1.3.1
	1(E)	What are the objectives of line balancing?	2	CO2	BT2	1.3.1
SECTION-B	Q2(A)	What are the essential components of JIT manufacturing?	2	CO3	BT2	1.4.1
	2(B)	Define the term TQM	2	CO3	BT1	1.3.1
	2(C)	Differentiate between ISO-9001 and ISO-9002.	2	CO4	BT2	2.2.4
	2(D)	What are the objectives of Six Sigma?	2	CO4	BT2	2.2.4
	2(E)	What is the importance of continuous Improvement?	2	CO4	BT2	2.2.4

SECTION-C	Q3(A)	Justify different types of waste in industry and how they can be controlled?	10	CO1	BT2,BT5	2.3.1, 12.1.1
	3(B)	How kaizen is a important tool for quality improvement.	10	CO1,CO2	BT2,BT5	2.3.1
	Q4(A)	List out different types of ISO 9000 and their importance.	10	CO2	BT2,BT3	2.2.4, 12.1.1
	4(B)	Justify the key elements of (TQM) Total quality management and its benefits in industry.	10	CO2	BT2,BT5	2.2.4
	Q5(A)	Illustrate the importance of JIT (Just in time) manufacturing system in industry.	10	CO3	BT4	2.3.1
	5(B)	Compare JIT with traditional manufacturing process.	10	CO3	BT2	2.2.4, 12.1.1

SECTION-D	Q6(A)	Explain all the essential steps required for an industry to apply for ISO-9000.	10	CO4	BT3	2.2.4
	6(B)	How overall equipment effectiveness is calculated? Give some Example.	10	CO4	BT2	2.3.1
	Q7(A)	Discuss Toyota production system and its benefits.	10	CO4	BT2	2.3.1
	7(B)	How lean manufacturing is important in an industry? Justify with example.	10	CO4	BT5	2.2.4
	Q8	Write short notes on any four of the following. (1) Kaizen (2) Poka-Yoke (3) ERP (4) Total productive maintenance (5) Six Sigma	20	CO1,CO2,CO4	BT2,BT4	2.2.4, 12.1.1

MANAV RACHNA UNIVERSITY

Declared as State Private University vide Haryana Act 26 of 2014

DEPARTMENT OF MECHANICAL ENGINEERING

"T3 Examination, May-2022"

SEMESTER	**4th**	**DATE OF EXAM**	**23/05/2021**
SUBJECT NAME	**STRENGTH OF MATERIAL - I**	**SUBJECT CODE**	**MEH205B-T**
BRANCH	**ME**	**SESSION**	**I**
TIME	**3 hrs**	**MAX. MARKS**	**100**
PROGRAM	**B.TECH SMA**	**CREDITS**	**5**
NAME OF FACULTY	**PRADEEP MOURIA**	**NAME OF COURSE COORDINATOR**	**PRADEEP MOURIA**

***Note**: All questions are compulsory.*

Q.NO.	QUESTIONS	MARKS	CO ADDRESSED	BLOOM'S LEVEL	PI
1	A point in a material is subjected to a stress as shown in figure. Calculate (a) principle stresses (b) maximum shear stress (c) resultant stress (d) shear stress (e) normal stress on the point. σ_{xx}= -100 Mpa(tensile), σ_{yy}= 150 Mpa(tensile), shear stress = 25Mpa 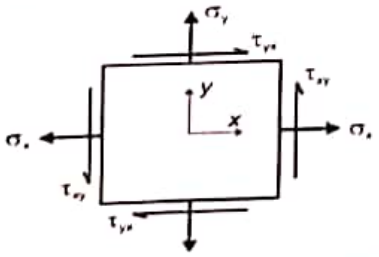	10	CO1	BL1	12.1.1
2	Find out the deflection and slope at different point of cantilever beam 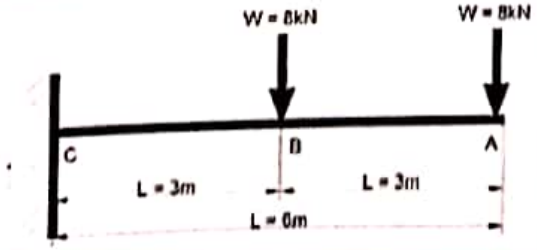	10	CO2	BL1	12.1.1

****

3	(a) Drive the torsion equation for solid and hollow shaft, also write the assumptions.	10			
	(b) Find out the diameter of the shat which is used to transmit 30 KW power at 300 rpm. Shear stress produced in the shaft is 60 MPa. The maximum torque transmitted is 20% of the mean torque.Length of the shat is 2m and angle of twist is 2degree. Take G= 80GPa.	10	CO3	BL4	12.3.4
	Draw the bending moment diagram and shear force diagram of fixed beam. 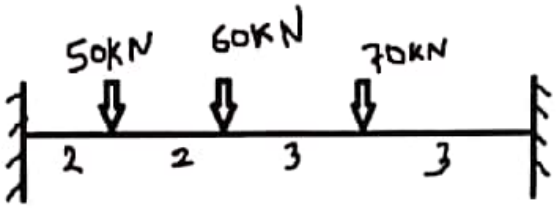	20	CO3	BL4	12.3.4
5	A column of 3 meters long and 60 mm in diameter is fixed at one end and hinged at other end derive the Euler's empirical formula of crippling load and using this Euler's formula find the safe load for the member while factor of safety is 3.0 and E = 210 GPa. Also drive the formula.	20	CO4	BL5	12.4.5
6	Determine the bending stress produced in the simple supported beam shown in the figure. The cross section area is also shown in figure 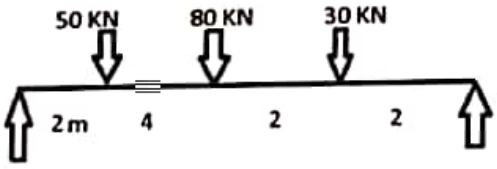 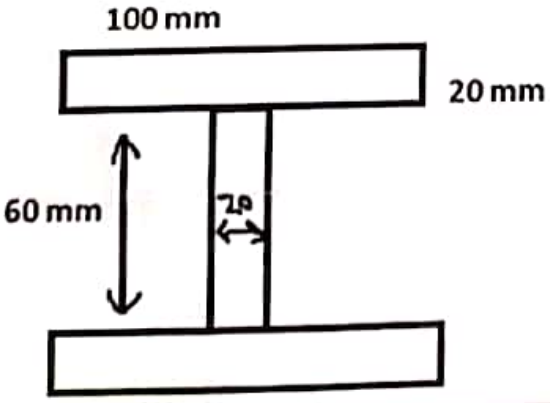	20	CO4	BL5	12.4.5

********** END **********

MANAV RACHNA UNIVERSITY

Declared as State Private University vide Haryana Act 26 of 2014

DEPARTMENT OF MECHANICAL ENGINEERING

"T3 Examination, May-2022"

SEMESTER	4TH	DATE OF EXAM	30th May 2022
SUBJECT NAME	THEORY OF MACHINE	SUBJECT CODE	MEH206B-T
BRANCH	MECHANICAL (SMA)	SESSION	1st
TIME	3hrs	MAX. MARKS	100
PROGRAM	B.TECH.	CREDITS	4
NAME OF FACULTY	Prashant Bhardwaj	NAME OF COURSE COORDINATOR	Prashant bhardwaj

Note: All questions are compulsory.

Q.NO.		QUESTIONS	MARKS	CO ADDRESSED	BLOOM'S LEVEL
PART-A	1(A)	Determine the mobility (degrees of freedom) of the mechanism shown in Fig. below using Kutzbach mobility criterion and classify them. 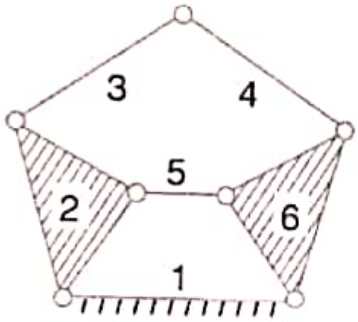	5	CO1	BT4
	1(B)	What do you understand by corioli's acceleration? Determine the magnitude of corioli's acceleration if a slider sliding at 10 cm/s on a link which is rotating at 60 r.p.m.	5	CO1	BT2
	1(C)	Why a roller follower is preferred to that of a knife-edged follower?	5	CO2	BT2
	1(D)	Explain the terms: (i) Circular pitch, (ii) module, and (iii) pitch circle diameter of a gear.	5	CO2	BT3
PART-B	Q2	An aeroplane makes a complete half circle of 50 metres radius, towards left, when flying at 200 km per hour. The rotary engine and the propeller of	20	CO3	BT4

****

		the plane has a mass of 400 kg with a radius of gyration of 300 mm. The engine runs at 2400 r.p.m. clockwise, when viewed from the rear. Find the gyroscopic couple on the aircraft and state its effect on it. What will be the effect, if the aeroplane turns to its right instead of to the left?			
	Q3	The arms of a Porter governor are each 250 mm long and pivoted on the governor axis. The mass of each ball is 5 kg and the mass of the central sleeve is 30 kg. The radius of rotation of the balls is 150 mm when the sleeve begins to rise and reaches a value of 200 mm for maximum speed. Determine the speed range of the governor. If the friction at the sleeve is equivalent of 20 N of load at the sleeve, determine how the speed range is modified.	20	CO3	BT4
PART-C	Q4	The turning moment diagram for a multicylinder engine has been drawn to a scale 1 mm = 600 N-m vertically and 1 mm = 3° horizontally. The intercepted areas between the output torque curve and the mean resistance line, taken in order from one end, are as follows: + 52, – 124, + 92, – 140, + 85, – 72 and + 107 mm2, when the engine is running at a speed of 600 r.p.m. If the total fluctuation of speed is not to exceed ± 1.5% of the mean, find the necessary mass of the flywheel of radius 0.5 m.	20	CO4	BT4
	Q5	Difference between static and dynamic balancing. Four masses m_1, m_2, m_3 and m_4 are 200 kg, 300 kg, 240 kg and 260 kg respectively. The corresponding radii of rotation are 0.2 m, 0.15 m, 0.25 m and 0.3 m respectively and the angles between successive masses are 45°, 75° and 135°. Find the position and magnitude of the balance mass required, if its radius of rotation is 0.2 m.	20	CO4	BT4

MANAV RACHNA UNIVERSITY

Declared as State Private University vide Haryana Act 26 of 2014

DEPARTMENT OF LAW

"T3 Examination, MAY-2022"

SEMESTER	IV	DATE OF EXAM	01.06.2022
SUBJECT NAME	LAW RELATING TO INTELLECTUAL PROPERTY RIGHTS	SUBJECT CODE	LWS325B
BRANCH	LAW	SESSION	2021-22 (I)
TIME	1.5 hrs	MAX. MARKS	50
PROGRAM	B.TECH	CREDITS	2
NAME OF FACULTY	AMIT KUMAR	NAME OF COURSE COORDINATOR	AMIT KUMAR

Part A - Attempt any ONE question.
Part B- Attempt any TWO questions.

Q.NO.		QUESTIONS	MARKS	CO ADDRESSED	BLOOM'S LEVEL
PART-A	Q1	What is "intellectual property"? Discuss the various kinds of "intellectual property" with the help of suitable illustrations.	10	CO2	BT1
	Q2	How technology and social media has affected the intellectual property system? Explain with the help of suitable example?	10	CO3	BT4
PART-B	Q3	"Copyright is described as bundle of rights". Explain the statement and discuss various categories of 'works' which are protected under The Copyright Act, 1957.	20	CO2	BT4
	Q4	Explain the mechanism involved for obtaining a 'patent' in India. What are the grounds for refusal of 'Patent'?	20	CO4	BT4
	Q5	Discuss the legal framework for the protection of Trade Marks in India.	20	CO2	BT2
	Q6	"Cyber crime has emerged as one of the biggest threat in the present era due to increased use of social media and greater dependency on technology". Explain the statement with the help of suitable examples.	20	C03	BT4

MANAV RACHNA
Vidyanatanikshai

MANAV RACHNA UNIVERSITY
FORMERLY MANAV RACHNA COLLEGE OF ENGINEERING
NAAC ACCREDITED B GRADE INSTITUTION
Declared as State Private University under section 2f of the UGC act 1956

DEPARTMENT OF FOREIGN LANGUAGE
T3 Examination, May 2022

Semester: 4th & 8th
Subject: German II
Branch: All
Course Type: Core
Time: 90 Minutes
Program: B.Tech/Education/Law

Date of Exam: 21/05/2022
Subject Code: FLS 106
Session: I
Course Nature: Soft
Max. Marks: 40
Signature: HOD/Associate HOD: Priyanka

Name: _____ Roll No. _____

Note: All questions are compulsory.

I. Lesen Sie den Text und beantworten die folgenden Fragen zum Text. (Read the given passage and answer the following questions in one sentence.) 5

Hallo, Ich heiße Klaus. Ich gehe gerne in die Schule. In der Klasse sind 30 Schüler. Es sind Mädchen und Jungen. Die meisten Lehrer sind nett. Florian ist mein bester Freund. In meiner Tasche habe ich ein Buch, Papier zum Schreiben, zwei Kugelschreiber, Buntstifte, Bleistifte und einen Radiergummi. Das Lineal brauche ich für Mathematik. Da bin ich nicht gut. Ich verstehe die Aufgaben nicht richtig.
Wir essen und trinken zusammen in der Pause. In der Pause spielen wir auch gern Fußball. Ich mag Sports. Deutsch ist eine schwere Sprache. Englisch spreche ich gut. Auch Biologie und Kunst habe ich gerne. Biologie ist interessant. Ich mag Tiere auch.

a) Wie viele Schüler sind in der Klasse?
_____.

b) Wie heißt der Freund von Klaus?
_____.

c) Was machen die Kinder in der Pause?
_____.

d) Was hat Klaus in seiner Tasche?
_____.

e) Welche Fächer (subjects) hat Klaus?

_____.

II. Schreiben Sie 5 Sätze über Ihr Haus.
(Write 5 sentences about your house.) **5**

_____

_____

_____

_____

_____

III. Setzen Sie das Verb in der richtigen Form ein!
(Fill in the given blanks with the correct form of separable verbs!) **5**

a) Das Konzert _____ um 23.00 Uhr _____. [aufhören]

b) Du _____ deinen hund _____. [abholen]

c) Wir _____ Kuchen _____. [einkaufen]

d) Ihr _____ Nudeln _____. [mitbringen]

e) Ich _____ von Januar _____. [anfangen]

IV. Ergänzen Sie bitte den richtigen Artikeln (der, die oder das) und übersetzen Sie die Wörter auf Englisch.
(Write the definite article and translate the given words in English.) **10**

a) _____ Tafel - _____

b) _____ Schwamm - _____

c) _____ Bleistift - _____

d) _____ Lineal - _____

e) _____ Buch - _____

f) _____ Kreide - _____

g) _____ Lehrerin - _____

h) _____ Projektor - _____

i) _____ Kugelschreiber - _____

j) _____ Radiergummi - _____

V. Bilden Sie Fragen! 5
(Frame questions!)

a) _____.

- Er heißt Atharva Kohli.

b) _____.

- Ich komme aus Bremen.

c) _____.

- Das ist ein Deutschbuch.

d) _____.

- Rahul spielt gern Cricket.

e) _____.

- Wir wohnen in Berlin.

VI. Ergänzen Sie die Personalpronomen! 5
(Fill in the blanks with the correct personal pronouns!)

a) Ich arbeite in Noida. Und _____?
Arbeitest _____ auch in Noida?
Nein, _____ arbeite in Gurugram.

b) Lernt Florian Hindi?
Ja, _____ lernt Hindi.

c) Wohnen Sie in Saket?
Ja, _____ wohne in Saket.

VII. **Ergänzen Sie bitte die Modalverben in der richtigen Form!**
(Fill in the blanks with the correct form of modal verbs.) **5**

a) _____ ich Ihnen helfen? [können]

b) Ricky _____ heute Gitarre spielen. [wollen]

c) Wir _____ viele Tickets kaufen. [müssen]

d) Du _____ deine Hausaufgaben machen. [sollen]

e) Ich _____ Deutsch lernen. [möchten]

MANAV RACHNA
Vidyanikunjam

MANAV RACHNA UNIVERSITY
FORMERLY MANAV RACHNA COLLEGE OF ENGINEERING
NAAC ACCREDITED A GRADE INSTITUTION
Declared as State Private University under section 2f of the UGC act, 1956

DEPARTMENT OF FOREIGN LANGUAGE
T3 Examination, May 2022

Semester: IV & VIII
Subject: French - II
Branch: All
Course Type: Core
Time: 90 Minutes
Program: B.tech |B.ed| Law

Date of Exam: 21./05/2022
Subject Code: FLS 107
Session: I
Course Nature: Soft
Max. Marks: 40
Signature: HOD/Associate HOD: Priyanka

Name: _____ Roll No. _____

Note: All questions are compulsory.

Section-A
(Compréhension d'Écrite – Reading Section)

Q1. Lisez le texte et répondez aux questions suivantes.
(Read the text and answer the following questions.)

Bonjour Pierre,
Je m'appelle Norma. Je suis américaine. J'ai 29 ans. Je suis mariée et J'ai un enfant.
Je suis journaliste `à Boston. Je n'aime pas voyager. Je préfère lire, visiter les musées et surtout (mostly) J'adore mon métier (profession). Je déteste le froid et la pluie.

Au revoir et à bientôt !
Norma

A. Dites vrai ou faux: (3)
(State if True or False)

a. Elle est célibataire. (single) _____
b. Norma est étudiante. _____
c. Elle aime bien son travail. _____

B. Répondez aux questions suivantes. (2)
(Respond to the following questions)

a. Quel est la nationalité de Norma ?

_____

b. Qu'est ce qu'elle déteste ?

_____

Section- B
(Production'Écrite – Writing Section)

Q2. Écrivez dans un paragraphe (environs 70-800 mots) (6)
(Write a paragraph around 70-80 words)

Décrivez votre saison préférée ou Décrivez votre journée
(Decribe your favroutite season or Describe your daily routine)

- _____
- _____
- _____
- _____
- _____
- _____
- _____
- _____
- _____
- _____
- _____
- _____
- _____
- _____

- _____
- _____

Section C – (Grammaire)

(5)

Q3. Conjuguez les verbes en present.
(Conjugate the verbs given in present tense)

a. Nous _____**(se réveiller)** à 5h du matin.

b. La mère _____**(préparer)** le repas pour ses enfants.

c. Je _____**(être)** très content de votre succès.

d. Vous _____**(finir)** le travail à l'heure

e. Elles _____**(remplir)** la fiche d'identité.

(4)

Q4. Remplissez les blancs avec les prépositions.
(Fill in the blank with the help of prepositions given in help box.)

a. Il y a un cinéma _____ de l'université. (Near)

b. La gare est _____ l'aéroport.(At the side of/next to)

c. Les fruits sont _____ la table. (On)

d. _____ mon enfance j'adore la glace. (Since)

(4)

Q5. Complétez avec l'adjectif possessif :
(Complete with the adjective possessive form : Mon,Ma, Mes, Ton,Ta, Tes.....leur,leurs)

a. John a une gomme. C'est_____gomme.

b. Elle s'appelle Michelle. C'est_____amie.

c. Nous habitons dans_____belle maison.

d. Je parle avec_____parents.

Q6. Écrivez la bonne forme de couleur.
(Write the correct form of color) (4)

a. Les cerises sont_____(Red).

b. Les feuilles (leaves) sont_____(Green).

c. La maison est_____(White).

d. Le ciel est_____(Blue).

Q7. Mettez au pluriel : **(3)**
(Change the sentence into plural form.)

a. Le gateau est bon.

_____.

b. La maison est grande.

_____.

c. Mon cousin est timide.

_____.

(3)

Q8. Mettez au féminin :
(Change the sentence into feminine form.)

a. Mon père est écrivain.

_____.

b. Le vendeur est gentil.

_____.

c. L'etudiant est intelligent.

_____.

(3)

Q9. Traduisez en français:
(Translate into french)

a. It's raining. _____.
b. It's pleasant. _____.
c. It's sunny. _____.

Section D
La culture et la civilisation

Q10. Remplissez les blancs. (3)
(Fill in the blanks.)

a. _____ est la date de fête français.

b. _____ et _____ sont deux monuments Français.

MANAV RACHNA
Vidyanadarisha

MANAV RACHNA UNIVERSITY
FORMERLY MANAV RACHNA COLLEGE OF ENGINEERING
NAAC ACCREDITED 'B' GRADE INSTITUTION
Declared as State Private University under section 2f of the UGC act, 1956

DEPARTMENT OF FOREIGN LANGUAGE
T3 Examination, May 2022

Semester: IV&VIII
Subject: Spanish II
Branch: All
Course Type: Core
Time: 90 Minutes
Program: B.Tech/Education/Law

Date of Exam: 21/05/2022
Subject Code: FLS105
Session: I
Course Nature: Soft
Max. Marks: 40
Signature:HOD/Associate HOD: Priyanka

Name: _____ **Roll No.** _____

Note: All questions are compulsory.

Ques. 1 Lee el texto y responde a las preguntas. **(5)**
Read the text and respond to the questions.

¿Qué tal? Mi nombre es Rohan. Yo soy moreno ni alto ni bajo, soy normal. Tengo el pelo corto y ondulado. Llevo gafas. En mi universidad tengo muchos amigos. Yo amo a una chica. Se llama Dristi. Ella es rubia, gorda y alta. Ella tiene ojos cortos y marrones. Ella tiene el pelo largo y rizado. En nuestro tiempo libre nos gusta jugar al fútbol, ver nuevas películas, leer novelas, salir con amigos. En sábado nosotros salimos con nuestros amigos para comprar, comer diferente comidas, jugar etc. en domingo nosotros estudiamos.

a. ¿Cómo se llama el chico?
b. ¿Cómo es la chica?
c. ¿Qué hacen ellos en su tiempo libre?
d. ¿Qué hacen con sus amigos?
e. Busca un verbo y hace una frase.

Ques. 2 Lee el texto y responde a las preguntas. **(5)**
Read the text and answer true or false.

¡Hola! Yo soy Anjali. Mi hermano se llama Pablo. Su edad es 12 años. Ella habla cuatro lenguas hindi, chino, español y un poco de italiano. Ella también aprende inglés. Mi mejor amiga y mi hermano estudian en misma (same) escuela. Mi mejor amiga se llama María y ella tiene 16 años. Ella es muy guapa y estudiosa. Ella también habla cuatro lenguas. Nosotros vemos películas juntos. Yo amo a mi amiga mucha.

Verdadero o falso:

a. Pablo habla español un poco. _____
b. El hermano de Anjali es Pablo. _____
c. María y Pablo no estudian en misma escuela. _____
d. Anjela y María tienen 16 años. _____
e. La mejor amiga de Anjali es guapa y estudiosa.

Ques. 3 Completa las frases con el horario y los verbos. **(10)**
Complete the phrases with time and conjugation of verbs.

e.g. Yo (despertarse) me despierto (at 7:20) a las siete y veinte.

¡Hola! Yo (levantarse)_____ (at 7:05)_____.

Yo (ducharse) _____ (at 7:15) _____.

Yo (cepillarse) _____ (at 7:25) _____.

Yo (desayunar) _____ (at 7:30) _____.

Yo (salir) a mi universidad _____(at 7:40) _____.

Yo (llegar) _____ (at 8:30) _____.

Yo estudio en colegio hasta (till) (4:15) _____. Yo almuerzo (at 2:00) _____. Yo (jugar) _____ baloncesto con mis amigos, Yo voy a casa (at 5:00). Yo (estudiar) _____ (8:20) _____.

Yo (cenar) _____ (at 9:30) _____. Yo (dormir) _____ (at 10:25).

Ques. 4 Describe este dibujo usando estar+gerundio. **(5)**
Describe this picture using present continuous.
e.g. Usel está durmiendo.

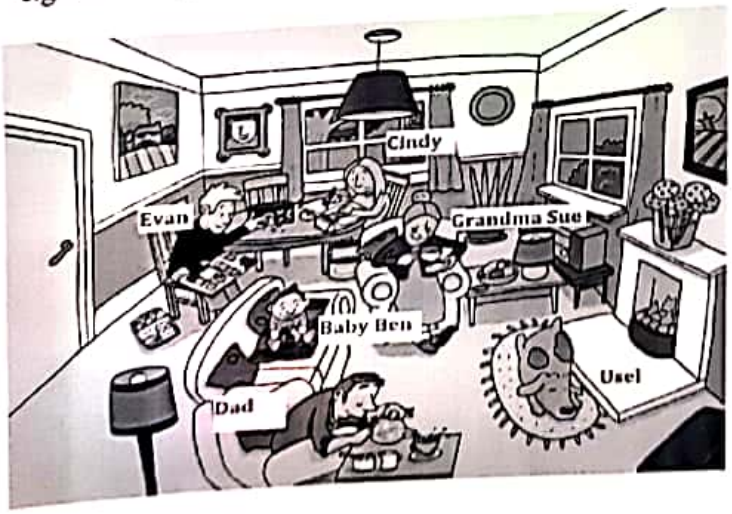

a. Evan _____

b. Baby Ben _____

c. Dad _____

d. Grandma Sue _____

e. Cindy _____

Ques. 5 Completa las frases con el verbo gustar. **(2.5)**
Complete the sentences with the verb gustar.

a. Ella _____ el chocolate.
b. Nosotras _____ las frutas.
c. Usted _____ manzanas.
d. Ellos _____ paella y pescado.
e. Tú _____ los animales.

Ques. 6 Conjuga los verbos en paréntesis. **(2.5)**
Conjugate the verbs in bracket.

a. Mi prima _____ (entrar) en la clase.
b. Marquez y yo_____ (empezar) a trabajar para mañana.
c. Yo siempre _____ (decir) la verdad a mi madre.
d. Los adultos _____ (cepillarse) los dientes todos los días.
e. ¿vosotros _____ (ver) la película?

Ques. 7 Elige la opción correcta. **(10)**
Choose the correct option.

a. Ellos _____ en India.
- son
- están
- sois

b. Nosotros _____ tristes.
- son
- estamos
- sois

c. Yo _____ aburrido.
- estoy
- soy
- es

d. Mi clase _____ enfrente de biblioteca.
- estoy
- soy
- está

e. Maria y juan _____ nerviosos.
- estáis
- sois
- están

f. Usted _____ estudiosa.

- es
- está
- estás

g. Éllas _____ inteligente.

- está
- son
- eres

h. Juan _____ en la escuela.

- estoy
- está
- es

i. Tu (estudiar) _____ en mi clase.

- estudia
- estudias
- estudie

j. Vosotros (escribir) _____ el poema.

- escribéis
- escribís
- escribáis

k. Ella (beber) _____ el zumo.

- bebemos
- bebimos
- bebe

l. Ella (leer) _____ el libro

- lee
- le
- lea

m. Vosotros (trabajar) _____ en la universidad.

- trabajáis
- trabajas
- trabaje

n. Yo (vivir) _____ en Delhi.

- vivo

- Vive
- vives

o. yo _____ pizza.
- como
- trabajo
- hablan

p. Vosotros _____ inglés.
- aprende
- aprenden
- aprendéis

q. Yo _____ con mis amigos.
- salgo
- salo
- salieo

r. Ella es _____ profesora.
- una
- un
- escorrecto

s. Yo _____ a mis padres.
- llamo
- llamas
- me llamo

t. Ella _____ Eva.
- se llama
- me llamo
- llama

MANAV RACHNA UNIVERSITY

Declared as State Private University vide Haryana Act 26 of 2014

Semester: 4
Subject Code: CD0-202
Roll No:.....

Subject: PCE-II
Time: 90 Mins
Max Marks: 50

NAME:.....
Dt. 27/05/2022
Branch: CST/ME/ECE
Session - I

Instructions: All questions are compulsory. Each question carries multiple options. No negative marking. Calculator is not allowed. ***Answers are to be filled in the answer table only. Answers written outside the answer table won't be considered.***

Answer Table:

1	2	3	4	5	6	7	8	9	10
11	12	13	14	15	16	17	18	19	20
21	22	23	24	25	26	27	28	29	30
31	32	33	34	35	36	37	38	39	40
41	42	43	44	45	46	47	48	49	50

QUANTITATIVE APTITUDE

Q1. The sum of ages of 5 children born at the intervals of 3 years each is 50 years. What is the age of the youngest child?
a) 4 b) 8 c) 10 d) None of these

Q2. A fruit seller had some apples. He sells 40% apples and still has 420 apples. Originally, he had:
a) 588 b) 672 c) 600 d) 700

Q3. Two discounts of 60% and 20% equal to a single discount of:
a) 70 b) 65 c) 66 d) 68

Q4. A sum of money at simple interest amounts to Rs. 815 in 3 years and to Rs. 854 in 4 years. The sum?
a) Rs. 650 b) Rs. 690 c) Rs. 698 d) Rs. 700

Q5. A and B invested in a business in the ratio 3:2. If 5% of the total profit goes to charity and A's share is Rs. 855, the total profit is:
a) Rs. 1425 b) Rs. 1500 c) Rs. 1537.50 d) Rs. 1576

Q6. The total of the ages of Amar, Akbar and Anthony is 80 years. What was the total of their ages three years ago?
a) 71 years b) 72 years c) 74 years d) 77 years

Q7. In spite of a discount of 20%, I managed to make a profit of 20%. What is the percent mark-up?
a) 40 % b) 25 % c) 0 % d) None of these

Q8. The salaries A, B, C are in the ratio 2:3:5. If the increments of 15%, 10% and 20% are allowed respectively in their salaries, then what will be new ratio of their salaries?
a) 3:3:10 b) 10:11:20 c) 23:33:60 d) Cannot be determined

Q9. If b equals 10% of a and c equals 20% of b, then which one of the following equals 30% of c?

a) 0.0006% of a b) 0.006% of a c) 0.06% of a d) 0.6% of a

Q10. The average score of 40 students in a Mathematics test is 50. If the highest and lowest scores were excluded, the average score of the class would decrease by 1. If the difference of these 2 scores is 60, find the highest score?

a) 84 b) 95 c) 99 d) 115

Q11. The compound interest on Rs. 30,000 at 7% per annum is Rs. 4347. The period (in years) is:

a) 2 years b) 2.5 years c) 3 years d) 4 years

Q12. What will be the compound interest on a sum of Rs. 25,000 after 3 years at the rate of 12% p.a.?

a) Rs.9000.30 b) Rs.9720 c) Rs.10123.20 d) Rs. 10483.20

Q13. The sum of three numbers is 98. If the ratio of the first to second is 2:3 and that of the second to the third is 5 : 8, then the second number is:

a) 20 b) 30 c) 48 d) 58

Q14. The sum of three numbers is 98. If the ratio of the first to second is 2 :3 and that of the second to the third is 5 : 8, then the second number is:

a) 20 b) 30 c) 48 d) 58

Q15. In a bag, there are coins of 25 p, 10 p and 5 p in the ratio of 1 : 2 : 3. If there is Rs. 30 in all, how many 5 p coins are there?

a) 50 b) 100 c) 150 d) 200

Q16. If 75% of a number is added to 75, then the result is the number itself. The number is:

a) 100 b) 200 c) 300 d) 400

Q17. A sum fetched a total simple interest of Rs. 4016.25 at the rate of 9% .p.a. in 5 years. What is the sum?

a) Rs. 4462.50 b) Rs. 8032.50 c) Rs. 8900 d) Rs. 8925

Q18. Two number are in the ratio 3 : 5. If 9 is subtracted from each, the new numbers are in the ratio 12 : 23. The smaller number is:

a) 27 b) 33 c) 49 d) 55

Q19. If 75% of a number is added to 75, then the result is the number itself. The number is:

a) 100 b) 200 c) 300 d) 400

Q20. The compound interest on Rs. 30,000 at 7% per annum is Rs. 4347. The period (in years) is:

a) 2 years b) 2.5 years c) 3 years d) 4 years

Q21. How much time will it take for an amount of Rs. 450 to yield Rs. 81 as interest at 4.5% per annum of simple interest?

a) 3.5 years b) 4 years c) 4.5 years d) 5 years

Q22. What amount does Kiran get if he invests Rs. 18000 at 15% p.a. simple interest for four years?

a) Rs. 28800 b) Rs.3500 c) Rs.4500 d) Rs.6000

Q23. With a given rate of simple interest the ratio of the principle and amount for a certain period of time is 4: 5. After 3 years with the same rate of interest to the ratio of the principle and amount becomes 5: 7. The ratio of interest per annum is?

a)5% b)7% c)8% d)12%

Q24. A person borrows Rs. 5000 for 2 years at 4% p.a. simple interest. He immediately lends it to another person at 6p.a for 2 years. Find his gain in the transaction per year.

a)Rs. 112.50 b)Rs. 200 c)Rs.250 d) Rs.350

Q25. Rs.1170 is divided so that 4 times the first share, thrice the 2nd share and twice the third share amount to the same. What is the value of the third share?

a)Rs. 540 b)Rs.700 c)Rs.850 d)Rs.900

VERBAL ABILITY

Direction (for Q.Nos. 26 – 27) In the following questions, each question consist of two words which have a certain relationship to each other followed by four pairs of related words, Select the pair which has the same relationship.

Q26. Gravity : Pull ::

a)Iron:Metal

b)North pole:Directions

c) Magnetism:Attraction

d) Dust : Fan

Q27. Indigent : Wealthy::

a)Angry:Rich

b) Native :Affluent

c) Scholary:Erudite

d)Gauche:Graceful

Q28.17. The meaning of the root word "crede" as in Credit, Credibility, Incredible is:

a)Money b) Believe c) Imagine d) Loan

Q29. The four sentences (labelled 1, 2, 3, 4) below, when properly sequenced would yield a coherent paragraph. Decide on the proper sequencing of the order of the sentences and key in the sequence of the four numbers as your answer:

1. It also has four movable auxiliary telescopes 1.8 m in diameter.
2. Completed in 2006, the Very Large Telescope (VLT) has four reflecting telescopes, 8.2 m in diameter that can observe objects 4 billion times weaker than can normally be seen with the naked eye.
3. This configuration enables one to distinguish an astronaut on the Moon.
4. When these are combined with the large telescopes, they produce what is called 'interferometry' which means a simulation of the power of a mirror 16 m in diameter and the resolution of a telescope of 200 m.

a) 2431 b) 3124 c) 1234 d)2143

Q30. The four sentences (labelled 1, 2, 3, 4) below, when properly sequenced would yield a coherent paragraph. Decide on the proper sequencing of the order of the sentences and key in the sequence of the four numbers as your answer:

1. But the attention of the layman, not surprisingly, has been captured by the atom bomb, although there is at least a chance that it may never be used again.
2. Of all the changes introduced by man into the household of nature, [controlled]large-scale nuclear fission is undoubtedly the most dangerous and most profound.
3. The danger to humanity created by the so-called peaceful uses of atomic energy may, however, be much greater.
4. The resultant ionizing radiation has become the most serious agent of pollution of the environment and the greatest threat to man's survival on earth.

a)3421 b) 3124 c) 2134 d)2413

Directions: In each of the following questions, find out which part of the sentence has an error:

Q31. a) Harish likes to play cricket b) and riding bicycle

c) besides playing video games. d) No error

Q32.a) Remember that you are part of the team and b) your success depends on the support

c) you are able to give and get from your team. d) No error

Q33. a) The teacher promised b) that she would explain it

c) if they come before school the following day. d) No error

Q34. a) My brother asked me b) if I can lend him my
c) blue shirt for a day d) No error

In the following questions, there is a sentence with jumbled up parts. Rearrange these parts, which are labelled a, b, c and d, to produce the correct sentence. Choose the proper sequence.

Q35. P. She wondered if Q. work hard for a living R. he would ever S. because he was so rich.
a)PQRS b)PQSR c)PRQS d)QRSP

Q36. P.I was certain Q. the management meeting. R. be allowed to attend S. that subordinates wouldn't
a)PQRS b)PQSR c)PSRQ d)QRSP

Choose the right option

Q37. Weather report: "It's seven o'clock in America and ..... ."
a) there is snow b) it`s snowing c)it snows d) it snowed

Q38. What time .....
a) the bus leaves? b)leaves the bus? c)is the bus leaving? d)does the bus leave?

Use the correct form of tenses from the options given below each question:

Q39. He _____ a secretary by next month
a)Employs b)Employed c)Has employed d)Will have employed

Q40. He ____ never _____ since he nearly _____
a) Has, swum, drowned b)Had, swum, was drowning
c)Was, swimming, drowned d)Did, swum, had drowned

Pick out the most effective word(s) from the given words to fill in the blank to make the sentence meaningfully complete

Q41. He lives near a lovely _____ of countryside.
a) length b) piece c) section d) stretch

Q42. Owing to the slump in the business, the companies are forced to _____ men.
a)throw away b) send off c) put off d) lay off

Q43. A sanguine outlook is associated with the _____.
a)Rationalist b) Socialist c) Optimist d) Philanthropist

Q44. The synonym for the word "WISE" is:
a) Momentous b) Pragmatic c) Judicious d) Delay

Q45. The antonym for the word "PERRENIAL" is
a)Frequent b) Regular c) Lasting d) Rare

Read the passage below and answer the questions that follow:

The sky was already full of rusting wings. But when Jean stepped into the still lusterless water, he seemed to be swimming in an indeterminate darkness until he saw the streaks of red and gold over the horizon. Then he suddenly swam back to land and climbed up the winding path to his house. After a great deal of panting he reached a little gate, pushed it open and climbed a stairway. The house above the world had its huge bay-windows through which one could see the horizon from one edge to the other. Here, no one complained of exhaustion. Everyone had his joy to conquer, every day.

Q46. Which of the following is indicated by the description in the passage?
a)Time before sunrise b) Time after sunset c) Clouds d)None of the above

Q47. "The house above the world" in the passage means:
a)Jean's house was very beautiful b)His house was on top of a hill
c) The house was very shabby d)All of the above

Q48. "Horizon" in the passage means:
a)Perception b)Skyline c)View d)None of the above

Q49. Was Jean too tired to walk up to his house?

a)Yes b)No c)Maybe d) Can't say

Q50. Jean's exhaustion evaded after seeing the

a)Sun b)House c)Sea d)Horizon

HOD CDC

(

MANAV RACHNA UNIVERSITY

Declared as State Private University vide Haryana Act 26 of 2014

DEPARTMENT OF MECHANICAL ENGINEERING

"T3 Examination, MAY-2022"

SEMESTER	VI		
SUBJECT NAME	OPERATION RESEARCH	DATE OF EXAM	20/05/2022
		SUBJECT CODE	MEH 310-B
BRANCH	ME		
TIME	9:00-12:00	SESSION	MORNING
PROGRAM	B.TECH SMA	MAX. MARKS	100
		CREDITS	4
NAME OF FACULTY	MANDEEP BHADANA	NAME OF COURSE COORDINATOR	MANDEEP BHADANA

Note: *Part A&B: Questions will be of 10 Marks each.*
Part C&D:. Each question will be of 20 marks. Attempt all questions.

Q.NO.		QUESTIONS	MARKS	CO ADDRESSED	BLOOM'S LEVEL	PI
PART-A&B	Q1	What is Break Even Analysis? You have the following data of a company- Variable manufacturing cost per unit Rs 15 , Variable selling cost per unit Rs 5, Fixed factory overhead cost 75000Rs, Fixed selling overhead cost 15000,selling price per unit Rs 25. Find (i) Break-even point in terms of sales value and in units (ii) Number of units that must be sold to earn a profit of Rs1,20,000.	10	CO1	L1	1.1
	Q2	Explain the various types of inventory maintained in a Manufacturing Organization and what are the objectives of inventory?	10	CO2	L2	1.2
PART-C	Q3	Find an initial basic feasible solution to the following transportation problem using NWCR Method And optimize it by MODI method.	20	CO3	L3	3.1

	W1	W2	W3	W4	SUPPLY
F1	19	30	5	10	7
F2	70	30	40	60	9
F3	40	8	70	20	18
DEMAND	5	8	7	14	

****

	Q4	Solve the assignment problem by Hungarian method to assign the different task to different operators so that the time should be minimized Operators Tasks $\begin{array}{c} \\ A \\ B \\ C \\ D \end{array} \begin{pmatrix} 1 & 2 & 3 & 4 \\ 20 & 28 & 19 & 13 \\ 15 & 30 & 31 & 28 \\ 40 & 21 & 20 & 17 \\ 21 & 28 & 26 & 12 \end{pmatrix}$	20	CO3	L3	3.2
PART-D	Q5	What is Management Information System? Explain the role of Value of information, information storage and retrieval system database and data structures in MIS.	20	CO4	L4	4.1
	Q6	What is Quality Management? Explain quality circles, quality assurance, statistical quality control and acceptance sampling with suitable examples.	20	CO4	L4	4.2

********** **END** **********

****

MANAV RACHNA UNIVERSITY

Declared as State Private University vide Haryana Act 26 of 2014

DEPARTMENT OF MECHANICAL ENGINEERING

"T3 Examination, May-June-2022"

SEMESTER	**6th**	**DATE OF EXAM**	**24.05.2022**
SUBJECT NAME	**Refrigeration & Air Conditioning**	**SUBJECT CODE**	**MEH311B-T**
BRANCH	**ME-SMA**	**SESSION**	**2021-22 (I)**
TIME	**09:00AM-12:00PM**	**MAX. MARKS**	**100**
PROGRAM	**B.Tech**	**CREDITS**	**04**
NAME OF FACULTY	**GIANENDER KAJAL**	**NAME OF COURSE COORDINATOR**	**GIANENDER KAJAL**

***Note:** All questions are compulsory. Questions will be of descriptive type or numerical.*

Q.NO.		QUESTIONS	MARKS	CO ADDRESSED	BLOOM'S LEVEL	PI
PART-A	1	Write short notes on: (i) How are the refrigerants classified? Discuss the desirable properties of a good refrigerant. (ii) Explain the term "tonne of refrigeration"	10	CO1	BT3	12.2.1 12.2.2
PART-B	2	A refrigerator based on V-C cycle operates between temperature limits of -20 °C &40 °C. The refrigerant enters the condenser as a saturated vapour at leaves as saturated liquid. The enthalpy & entropy of saturated liquid and saturated vapour at this temperature is given in the form of tables: t(°C) | h_f(kJ/kg) | h_g(kJ/kg) | S_f(kJ/kg K) | S_g(kJ/kg K) -20 | 20 | 180 | 0.07 | 0.7366 40 | 80 | 200 | 0.3 | 0.67 If the mass flow rate of refrigerant is 0.025kg/sec. Find refrigeration capacity in kW & COP.	10	CO2	BT4	10.3.1
PART-C	3(A)	120 m^3/min of air at 35 °C dry bulb temperature and 45% relative humidity is mixed with 325 m^3/min of recirculated air at 20 °C dry bulb temperature and 10 °C DPT. Determine the enthalpy, specific volume, humidity ration and DPT of the mixing stream.	10	CO3	BT5	3.1.2

3(B)	The moist air at 1.013 bar and 40°C contain 10gm of vapour per kg of dry air. Saturation pressure of vapour at 40°C is 3.167KPa. Find relative humidity	10	CO3	BT4	10.3.1 12.1.1
3(C)	Name any five psychrometric processes and represent them on the psychrometry chart. Also explain the difference between moist air and saturated air.	10	CO3	BT3	1.1.2
3(D)	Define and explain the following terms in relation to psychrometry (a) Dry bulb, wet bulb and dew point temperatures (b) Relative humidity and specific humidity	10	CO3	BT2	12.2.1
4(A)	Write short notes on: (a) Types of Condensor (b) Types of Throttling devices	10	CO4	BT2	12.2.1 12.2.2
4(B)	Define Psychrometric chart. Explain the following psychrometric process (i) Adiabatic mixing of two streams (ii) heating &Dehumidification (iii) Cooling & Humidification (iv) B.P.F	10	CO4	BT3	10.3.1
4(C)	Moist air with dry bulb temperature of 40 °C has a relative humidity of 60%. Atmospheric pressure is 1.03 bar. The saturation pressure of vapour at 40 °C is 7.50KPa & the saturation pressure of vapour at 130 °C is 4.758bar (i) Find specific humidity (ii) Moist air as stated above is compressed to 5.05 bar & corresponding DBT is 130 °C. Then find the relative humidity of compressed air?	10	CO4	BT4	12.2.1 12.2.2
4(D)	The following information is available for the air-conditioning system of a particular premises: Out-door conditions = 30°C DBT and 65% RH Inside indoor-conditions = 20°C DBT and 65% R.H. The specification require that 150 m^3/min of air is delivered to the premises after conditioning it by cooling and dehumidification and subsequently heating it in a heating coil. If the DPT of the cooling coil is 25°C, analyze the problem on psychrometric chart and determine: (a) capacity of cooling coil in tons of refrigeration (b) capacity of heating coil in kW (c) amount of water vapour removed per hour	10	CO4	BT4	10.3.1

PART-D

********** END **********

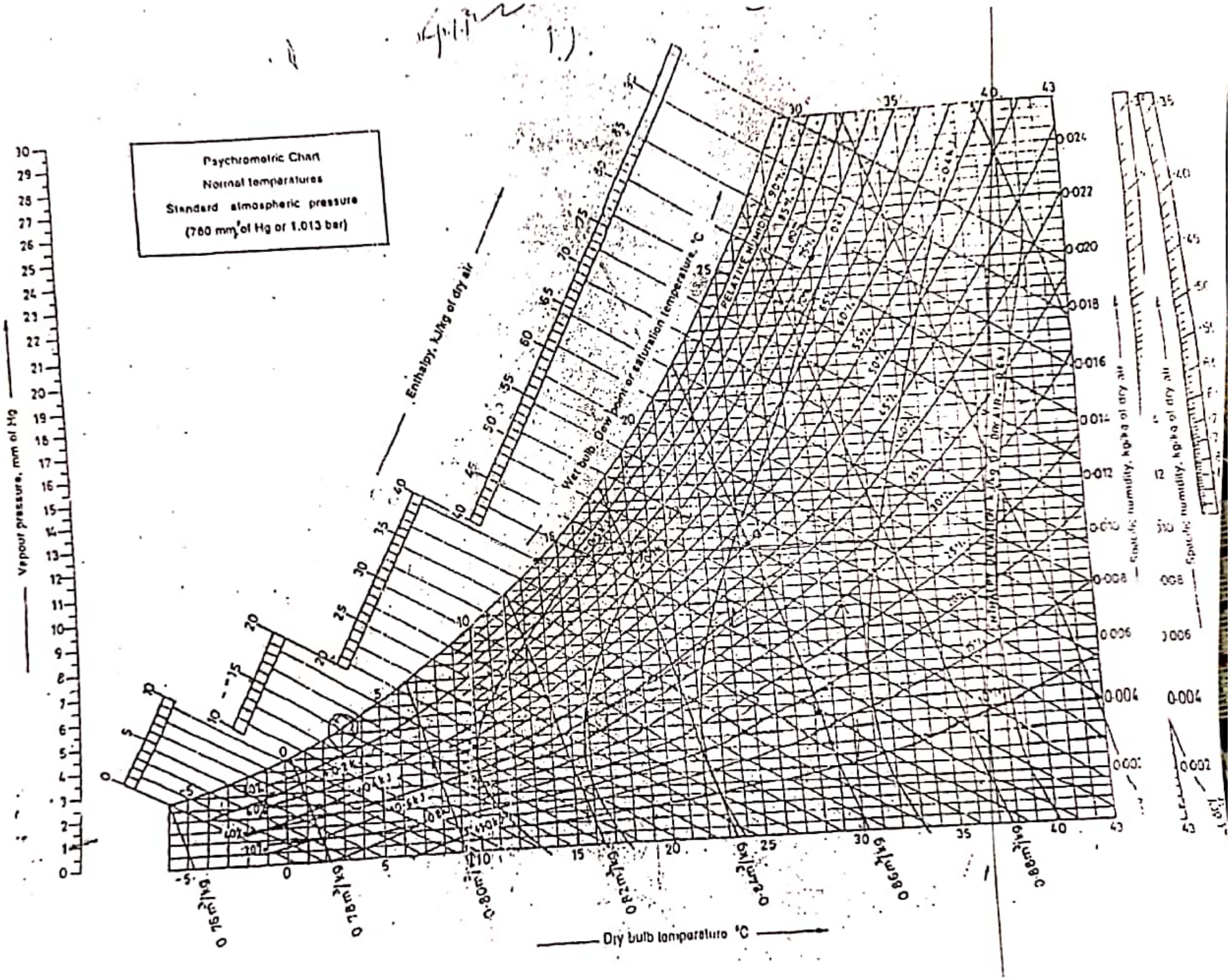

MANAV RACHNA UNIVERSITY

Declared as State Private University vide Haryana Act 26 of 2014

DEPARTMENT OF MECHANICAL ENGINEERING

"T3 Examination, May.-2022"

SEMESTER	6th	DATE OF EXAM	31-05-2022
SUBJECT NAME	MECHANICAL VIBRATION	SUBJECT CODE	MEH312B-T
BRANCH	ME-SMA	SESSION	MORNING
TIME	09.00 AM to 12.00 PM	MAX. MARKS	100
PROGRAM	B.Tech	CREDITS	04
NAME OF FACULTY	Nazish Ahmad Shamsi	Signature of HoD	

Note: All questions are compulsory.

Q.NO.		QUESTIONS	MARKS	CO	BLOOM'S LEVEL	PI
PART - (A & B)	1(A)	Discuss Torsional, Transverse and Longitudinal vibrations along their effects on a system.	05	CO1	BT2	1.3.1
	1(B)	Discuss the D'Alembert principle for vibration.	05	CO1	BT2	12.2.1
	2(A)	Elaborate the possibilities occurring due to variation of frequency ratio (ω/ω_n) in forced vibration system.	05	CO2	BT3	2.1.4
	2(B)	Define the following terms: i)displacement transmissibility ii)forced transmissibility.	05	CO2	BT2	12.2.1
PART-C	3(A)	Explain the concept of coordinate coupling in vibrating system. Also derive its relation and elaborate its application.	20	CO3	BT5	2.2.1

	3(B)	Determine the natural frequency of the system shown in figure by Matrix Iteration Method. 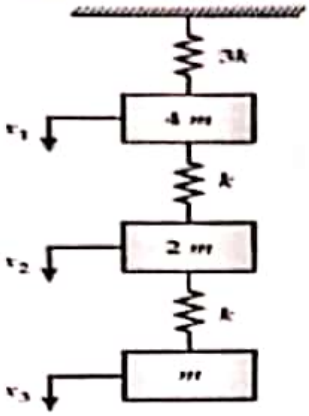	20	CO3	BT4	10.3.1
PART-D	4(A)	Derive the general wave equation for Torsional vibration of a uniform shaft by taking suitable parameters.	20	CO4	BT5	2.1.4
	4(B)	Discuss the concept of Rayleighs energy method used to find the frequency of the system with transverse point Loads with suitable example of your choice.	20	CO4	BT5	10.3.1

********** END **********

MANAV RACHNA UNIVERSITY

Declared as State Private University vide Haryana Act 26 of 2014

DEPARTMENT OF MECHANICAL ENGINEERING

"T3 Examination, May. -2022

SEMESTER	6th	DATE OF EXAM	31.05.2022
SUBJECT NAME	Automobile Engineering	SUBJECT CODE	MEH313B-T
BRANCH	ME	SESSION	2021-22
TIME	09.00 AM to 12.00 PM	MAX. MARKS	100
PROGRAM	B. Tech	CREDITS	04
NAME OF FACULTY	Dr. Gurpreet Singh Matharou	Signature of HoD	

Note: All questions are compulsory. Questions will be of the descriptive type or numerical.

Q.NO.		QUESTIONS	MARKS	CO ADDRESSED	BLOOM'S LEVEL	PI
PART (A)	1(A)	Analyze the effect on power transmission, space requirement, and ease of operation if multi-plate is being replaced with a single plate clutch arrangement.	5	CO1	BT4	12.2.112.2.2
	1(B)	Explain how a centrifugal clutch is being employed in an automatic transmission system.	5	CO1	BT2	12.2.112.2.2
PART (B)	2(A)	Differentiate between Three-quarter floating and Semi Floating Rear Axles.	5	CO2	BT2,3	10.3.1
	2(B)	With a neat sketch, explain the power flow in a transaxle system.	5	CO2	BT 3	10.3.1
PART (C)	3(A)	Explain the significance of the following terms associated with the steering system. i. Caster, ii. Camber, iii. Kingpin Inclination, iv. Toe-in/Toe-out.	5X4 =20	CO3	BT2	3.1.2
	3(B)	Give constructional details and characteristics of leaf springs with a damper.	10	CO3	BT4,5	10.3.112.1.1
	3(C)	With a neat sketch, explain the working principle of a Power steering system.	10	CO3	BT2	10.3.112.1.1
PART (D)	4(A)	What is a catalytic converter? Explain with a neatly labeled sketch. What are the associated reduction and oxidation catalysts?	20	CO4	BT1,3	12.2.112.2.2
	4(B)	Reframe the constructional details and characteristics of a drum brake.	10	CO4	BT5	10.3.112.1.1
	4(C)	Develop a troubleshooting chart of a lead acid battery.	10	CO4	BT6	10.3.112.1.1

********** END **********

MANAV RACHNA UNIVERSITY

Declared as State Private University vide Haryana Act 26 of 2014

DEPARTMENT OF MECHANICAL ENGINEERING

"T3 Examination, May-2022"

SEMESTER	6	**DATE OF EXAM**	31/MAY/2022
SUBJECT NAME	COMPOSITE MATERIALS	**SUBJECT CODE**	MEH314B-T
BRANCH	ME	**SESSION**	I
TIME	3 HOURS	**MAX. MARKS**	100
PROGRAM	B.TECH	**CREDITS**	4
NAME OF FACULTY	DR. JOGINDER SINGH	**SIGNATURE OF HOD**	

***Note**: All questions are compulsory.*

Q.No.		Questions	Marks	CO Addressed	Bloom's Level	Pi
PART-A	1	In a unidirectional glass/epoxy lamina, the properties of the constituents are as follows: Elastic Modulus of Glass Fibre = 83 GPa, Elastic Modulus of Epoxy = 3.7 GPa, Poisson's Ratio of Glass Fibre = 0.24, Poisson's Ratio of Epoxy = 0.30, Shear Modulus of Glass Fibre = 30 GPa, Shear Modulus of Epoxy = 1.2 GPa, Fibre Volume Fraction = 59%. Calculate the Elastic Modulus, Poisson's Ratio and Shear Modulus at various angles and complete the following Table-01:	60 Marks (Break given below)	CO4	BT-6	

Mechanical Property	0°	15°	30°	45°	60°	75°	90°
Elastic Modulus							
Poisson's Ratio							
Shear Modulus							
	(6 Marks	6 Marks	6 Marks	6 Marks	6 Marks	6 Marks	6 Marks)

Draw the graph between Elastic Modulus and Fibre Orientations? (6 Marks)
Draw the graph between Poisson's Ratio and Fibre Orientations? (6 Marks)
Draw the graph between Shear Modulus and Fibre Orientations? (6 Marks)

2	A unidirectional glass/epoxy lamina having a 64% fiber volume fraction have the Young's moduli and Poisson's ratios of the fiber and matrix as: E_f=80GPa, υ_f=0.24 and E_m=3.2GPa, υ_m=0.30, E_f=80GPa, υ_f=0.24 and E_m=3.2GPa, υ_m=0.30 respectively.	20 Marks	CO4	BT-6	

****

	The coefficients of thermal expansion for the fiber and matrix are: $\alpha_f = 5\mu m/m/^0C$ and $\alpha_m = 60\ \mu m/m/^0C$ The coefficient of longitudinal thermal expansion is ____ $\mu m/m/^0C$ The coefficient of transverse thermal expansion is ____ $\mu m/m/^0C$				
3	Compose the Hand Layup Process and Spray Layup Process in composites?	20 Marks	CO3	BT-5	

********** END **********

****

MANAV RACHNA UNIVERSITY

Declared as State Private University vide Haryana Act 26 of 2014

DEPARTMENT OF MECHANICAL ENGINEERING

"T3 Examination, May-2022"

SEMESTER	**6th**	**DATE OF EXAM**	**02.06.2022**
SUBJECT NAME	**Internal combustion engine & gas turbine**	**SUBJECT CODE**	**MEH-320B-T**
BRANCH	**Mechanical engineering**	**SESSION**	**I**
TIME	**09:00 to 12:00 PM**	**MAX. MARKS**	**100**
PROGRAM	**B.Tech**	**CREDITS**	4
NAME OF FACULTY	**J P SHARMA**	**NAME OF COURSE COORDINATOR**	**J P SHARMA**

***Note**: Part A & B: All questions are compulsory.*
Part C & D: Attempt any two in each section

Q.NO.		QUESTIONS	MARKS	CO ADDRESSED	BLOOM'S LEVEL	PI
PART-A	1(A)	Derive an expression for the efficiency, mean effective pressure & work output of dual cycle.	10	CO1	2	2.1.2
PART-B	Q2(A)	What are the factors affecting delay period in CI Engine.	10	CO2	2	2.1.1
PART-C	Q3(A)	Discuss all variables affecting performance characteristics of an engine.	20	CO1	1	1.3.1
	3(B)	An eight cylinder, 4 stroke engines of 9 cm bore and 8cm stroke with a compression ratio of 4 is tested at 4500 rpm on a dynamometer which has 54 cm arm. During a 10 minute test the dynamometer scale beam reading was 42 kg and the engine consumed 4.4 kg of gasoline having a calorific value of 44000 KJ/kg. air 27°C and 1 bar was supplied to the carburetor at the rate of 6 kg/min. Find (i) The brake power delivered (ii) The brake mean effective pressure (iii) The brake specific fuel consumption (iv) The brake thermal efficiency and	20	CO1	4	4.2

****

		(v) The air fuel ratio				
	Q3(C)	Explain Wankel engine with their advantages and disadvantages. What are the different stages of combustion in C I engine with diagram.	20	CO3	2	2.1.2
PART-D	Q4(A)	Air is taken in a gas turbine plant at 1.1 bar and 20°C. The plant comprises of L.P and H.P compressor and turbine. The compression in L.P stage is upto 3.3 bar followed by intercooling to 27°C. the pressure of air after H.P compressor is transferred to heat exchanger of effectiveness 0.65 where it is heated by the gases form L.P turbine. After heat exchanger the air passes through combustion chamber. The temperature of gases supplied to H.P turbine is 700°C. The gases expand in H.P turbine to 3.62 bar and air then reheated to 970°C before expanding in L.P turbine. The loss of pressure in reheater is 0.12 bar. Determine **overall efficiency, work ratio** and **mass flow** rate when the power generated is 6000 KW. Assume: isentropic η of both compressor = 0.82, isentropic η of expansion in turbine is 0.85. For air C_p = 1.005 KJ/Kg K, γ = 1.4, For gases C_p = 1.15KJ/Kg K, γ = 1.33, Neglect the mass of fuel.	20	CO4	4	4.2
	Q4(B)	Explain detonation in CI engine. Also explain the effects of engine variable on detonation. What do you mean by octane rating of fuel?	20	CO3	2	2.1.1
	Q4(C)	Derive expression for efficiency & optimum ratio of closed cycle gas turbine	20	CO4	1	1.3.1

********** **END** **********

****